Display element Colour TFT/LCD

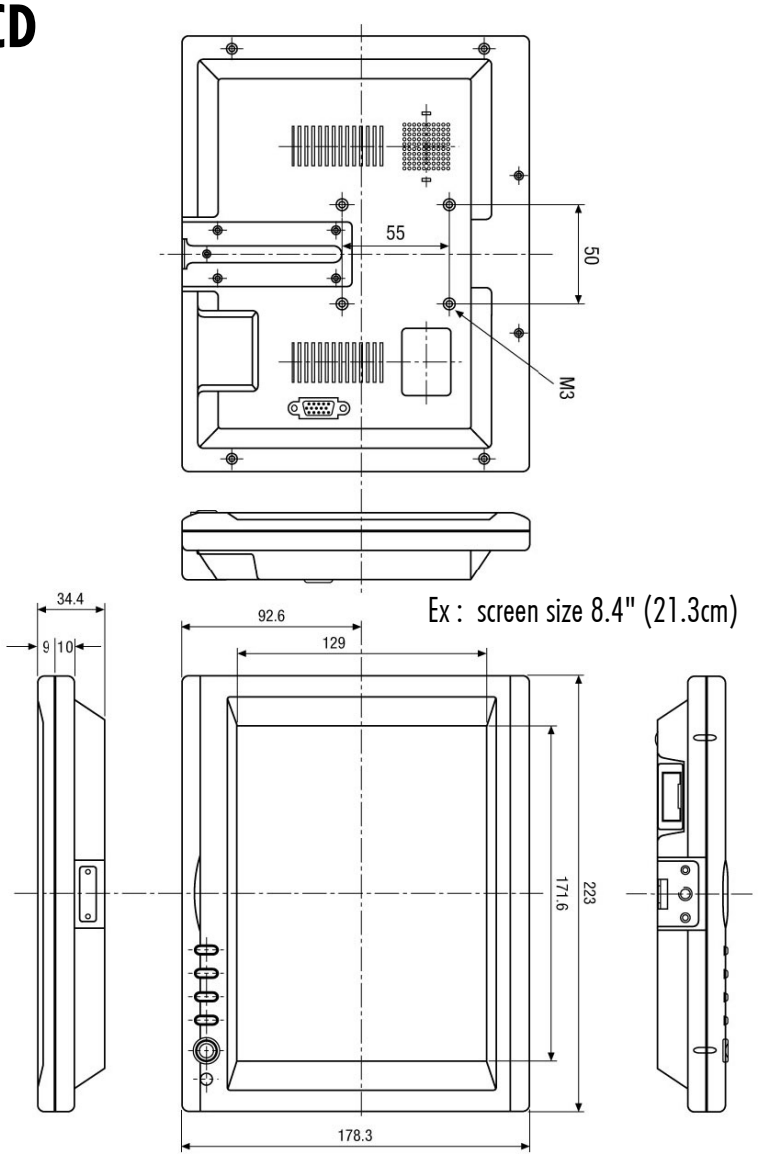

Ex : screen size 8.4" (21.3cm)

Specifications
Video standard PAL, NTSC (Auto detection)
Display element Colour TFT/LCD.
Screen size :
5.6" / 8.4" / 10.4" / 15" / 17" / 19" / 23" / 32"
Resolution 800x600 Pixels max. (PC/RGB)
Pixel fault class ISO 13406-2, Class II
Colour scales 262,144 (6bit)
Contrast ratio typ. 250:1
Brightness typ. 300cd/m²
Angle of view (L/R/B/T) typ. +/-55°, 35°, 35°
Scanning frequency range (H) 15.63 ~ 14.73kHz
Scanning frequency range (V) 50 ~ 60Hz
Response time 100ms (tr: 50 / td: 50)
Synchronization Internal
Horizontal resolution Approx. 420TVL (CVBS)
Input signals CVBS, S-VHS, RGB (switchable), Audio
PC interface VESA standard: VGA to SVGA, 15-pin
Video inputs 1Vp-p (C)VBS, 75ohms, Cinch; Y/C: Y= 0.7Vss, C= 0.3Vss, 75ohms, 4-pin Mini DIN

intersonic
Avenue Edmond-Vaucher 53
CH 1219 Chatelaine

Intersonic
Pascal BAUD
mars 2007
ENEO
022 797 4444